ANIMAL SHELTER

REQUEST FOR PROPOSAL

BID # 2011-02

REVISION #1 (5-18-11)

REVISION #2 (5-19-11)

PLEASE CHECK BACK REGULARLY FOR ADDITIONAL REVISIONS.

BEAVER COUNTY, ON BEHALF OF THE COUNTY, MILFORD AND BEAVER CITY AND MINERSVILLE TOWN, IS ACCEPTING BIDS for the construction of an Animal Shelter.

1. BID OPENING DATE: MAY 11, 2011
   BID CLOSING DATE: ***MAY 31, 2011. 5:00 P.M.*** (this is the extended deadline)
   BIDS ACCEPTED AT: BEAVER COUNTY CLERK/AUDITORS OFFICE
   105 EAST CENTER PO BOX 392
   BEAVER, UTAH 84713
   BID COPIES: SUBMIT 8 SEALED COPIES OF YOUR BID.

2. QUESTIONS SHOULD BE DIRECTED TO SCOTT ALBRECHT, (435)438-6490.

3. PROPOSER REQUIREMENTS
   - 3.1 All proposers must be a licensed contractor. License must be presented with the bid.
   - ~~3.2 Proof of a performance bond may be required by the successful bidder.~~ Performance Bond will NOT be required
   - 3.3 Liability insurance shall be presented as part of this bid.
   - 3.4 All proposals must prove to be responsible and responsive according to this RFP.
   - 3.5 All proposals are required to meet all conditions/specifications in this RFP.
   - 3.6 If conditions/specifications are not met, the proposer must document such discrepancies in their bid.
   - 3.7 Proposers shall submit the number of working days it will take to complete the Scope of Work.
   - 3.8 Indicate which revisions of this RFP you have included in your bid.

4. SCOPE OF WORK

   The project includes the excavation and construction of footings, stem wall, foundation, plumbing, electrical, kennels, interior partitions, and CMU building erection for a 68'4"x30'x10' Animal Shelter according to the specification outlined in this RFP.

5. BID ALTERNATES
   - 5.1 The footing, foundation, and cost of a pre-manufactured steel building.
     - 5.1.1 Footings, Foundation, Interior Slab and Building plans must be certified engineer plans specific to the steel building specifications. (Including a minimal frost wall of 30" or equivalent)
     - 5.1.2 Insulation package
     - 5.1.3 Interior of the structure shall be lined with a minimum of 26 gauge steel.

5.1.4 This alternate proposal will include all of the interior structures as outlined in the original bid per this RFP.

5.1.5 Steel Building shall be engineered with the same specifications for Snow Live Load, Roof Dead Load, Wind Loading, and Soil Bearing Pressures, as the original bid.

5.2 8" CMU interior walls for kennel construction instead of the 4' walls as indicated on *Page 3, Key Note 4* of the *Animal Shelter Plans* and/or *page 5 of the Animal Shelter Calculations* document per this RFP.

5.3 Propane Heaters instead of the Ceiling Mount Electrical 220 v Heater.

~~5.4 A line item showing the increased cost (if any) in the event a performance bond is required.~~

5.5 Shingle Roofing & Vinyl Siding on Gable ends

5.6 Garage Door Opener and Outlet

5.7 Insulation in Roofing of entire building

6. OTHER BUILDING SPECIFICATIONS

6.1 Interior Walls shall be stick built using standard 2x4 framing

6.1.1 Interior Stick Walls Shall be insulated

6.1.2 Interior Stick Built walls shall be sheet rocked

6.1.3 Interior Stick Built walls shall be finished with an Orange Peel paint

6.2 All of the Ceiling shall be sheet rocked

6.2.1 Insulation shall be installed in the roof over the office area only

6.2.2 Ceiling shall be taped and finished with a stomp ceiling texture

6.3 All interior doors will be residential 3x0x6x8

6.4 Exterior Door will be metal door and frame

6.5 Concrete shall be sealed in the Kennel area with Penetration Sealer Dayton Superior J29 or equivalent.

6.6 For the purposes of this bid, Stub Sewer, Electrical Conduit and Main Water Lines out of the building 5'

6.7 Gray, unpainted block shall be used

6.8 Metal roofing shall be used

6.9 5'x5'x3" concrete slab in front of entrance door

6.10 Non-insulated, Manual Garage Door

6.11 Special Inspector referenced in this RFP is the Beaver County building inspector, Craig Davis or Kyle Blackner

6.12 Bathroom will require a vent fan (not shown on electrical plans)(include cost of all wiring and switches needed)

6.13 Kennel area will require two vent fans (not shown on electrical plans) (include cost of all wiring and switches needed)

6.14 Metal Siding shall be used on gable ends

6.15 Aluminum soffit/fasica

6.16 (See Plumbing Plans for additional Changes)

7. PROJECT UNKNOWNS

7.1 It is undecided whether the facility will be connected to City water or a well system.

7.2 The exact location and depth of the sewer line is undetermined.

7.3 The kennel doors and the kennel enclosures are undetermined.

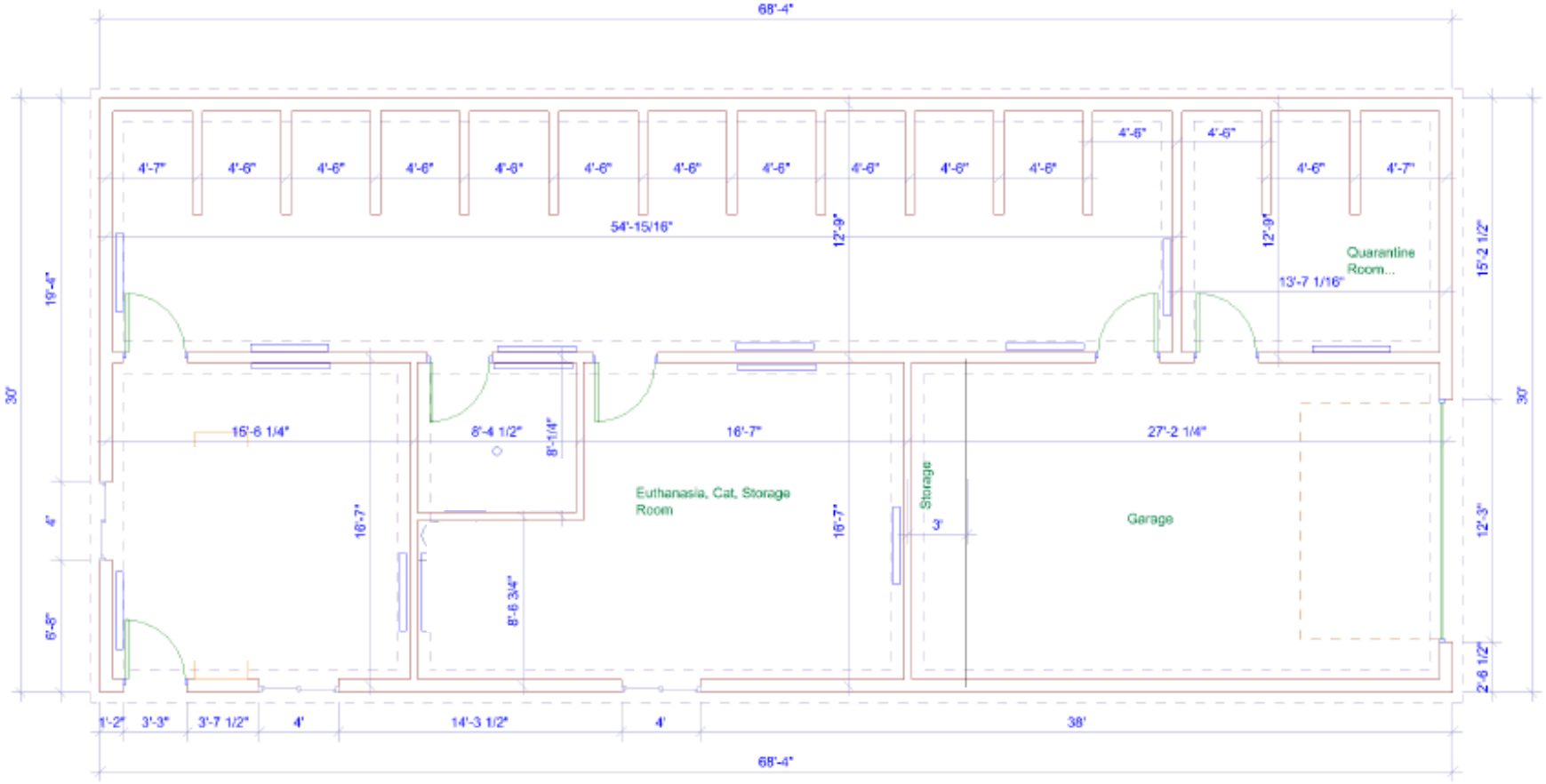
68'-4"
4'-7"
4'-6"
4'-6"
4'-6"
4'-6"
4'-6"
4'-6"
4'-6"
4'-6"
4'-6"
4'-6"
4'-6"
4'-6"
4'-6"
4'-7"
54'-15/16"
12'-9"
12'-9"
Quarantine Room...
13'-7 1/16"
15'-2 1/2"
19'-4"
30'
30'
15'-6 1/4"
8'-4 1/2"
8'-1/4"
16'-7"
27'-2 1/4"
Euthanasia, Cat, Storage Room
16'-7"
16'-7"
Storage
3'
Garage
12'-3"
4'
6'-8"
8'-6 3/4"
2'-6 1/2"
1'-2"
3'-3"
3'-7 1/2"
4'
14'-3 1/2"
4'
38'
68'-4"

GENERAL:

UNLESS NOTED OTHERWISE, ALL WORK SHALL CONFORM TO THE REQUIREMENTS OF THE 2009 INTERNATIONAL BUILDING CODE. IT IS THE CONTRACTOR'S RESPONSIBILITY TO VERIFY ALL EXISTING CONDITIONS AT THE JOB SITE, AND TO FULLY COORDINATE ALL DIMENSIONS AND CONDITIONS OF DETAILS WITH OTHER DISCIPLINES. ANY FIELD CONDITIONS REQUIRING CONSTRUCTION THAT IS DIFFERENT FROM THAT SHOWN ON THE PLANS SHALL BE BROUGHT TO THE ATTENTION OF THE ARCHITECT. ANY CONFLICTING DETAILS SHOWN IN THE DRAWINGS SHALL BE BROUGHT TO THE ATTENTION OF THE ARCHITECT PRIOR TO THE CONSTRUCTION OF SAID DETAIL. DO NOT SCALE DRAWINGS. ANY QUESTIONS REGARDING THE CONSTRUCTION DOCUMENTS SHALL BE SUBMITTED TO THE ARCHITECT IN THE FORM OF A WRITTEN REQUEST FOR INFORMATION.

ALL SUPPORT OF CONSTRUCTION LOADS SHALL BE THE RESPONSIBILITY OF THE CONTRACTOR. ALL SHORING AND BRACING REQUIRED FOR THE PROTECTION OF LIFE AND PROPERTY DURING THE CONSTRUCTION PROCESS SHALL BE THE RESPONSIBILITY OF THE CONTRACTOR. ALL PROCEDURES OF SOIL EXCAVATION, BACK FILL, AND SUPPORT OF ADJACENT PROPERTY DURING EARTHWORK SHALL BE THE RESPONSIBILITY OF THE GENERAL CONTRACTOR.

ALL DIMENSIONS INDICATED ON PLANS SHALL BE TO FACE OF STUDS, FACE OF CONCRETE BLOCK, FACE OF ROUGH CONCRETE, CENTERLINE OF COLUMNS, BOTTOM OF METAL DECK, AND TOP OF SLAB, UNLESS NOTED OTHERWISE. REFER TO ARCHITECTURAL DRAWINGS FOR ALL DIMENSIONS NOT INDICATED ON STRUCTURAL DRAWINGS. THE FOLLOWING DESIGN CRITERIA SHALL BE ENFORCED;

ROOF DEAD LOAD: 15 PSF.
ROOF SNOW LOAD:
P_f = 30 PSF
C_e = 1.0
I = 1.0
C_t = 1.0
WIND FORCES:
BASIC WIND SPEED: 90 MPH (3 SECOND GUST), 70 MPH (FASTEST MILE)
WIND EXPOSURE TYPE: C
WIND IMPORTANCE FACTOR: 1.0
SEISMIC USE GROUP I
S_{DS} = 0.61
S_{D1} = 0.31
SITE CLASS D
SEISMIC DESIGN CATEGORY D
BASIC LFRS = SPECIALLY INSPECTED MASONRY SHEAR WALL
R=5.0
W WEIGHT OF STRUCTURE:
DESIGN BASE SHEAR - 0.123W (ULTIMATE)
0.086W (SERVICE)
DESIGN PROCEDURE: EQUIVALENT LATERAL FORCE

FOUNDATIONS:

MAXIMUM ALLOWABLE SOIL PRESSURE: = 1500 PSF. PER IBC 2009 TABLE 1804.2

ALL FOOTING DEPTHS INDICATED ON PLANS ARE MINIMUM DEPTHS. FOOTINGS MAY BE PLACED IN NEAT EXCAVATED TRENCHES. TRENCH SHALL BE APPROVED BY INSPECTOR PRIOR TO PLACEMENT OF CONCRETE. AT LOCATIONS WHERE STRUCTURAL FILL IS REQUIRED, FILL SHALL BE PLACED IN 6" LIFTS & COMPACTED AT OPTIMUM MOISTURE CONTENT. REFER TO SOILS INVESTIGATION FOR DEPTH AND EXTENT OF STRUCTURAL FILL.

CONCRETE:

ALL CONCRETE MATERIALS SHALL COMPLY WITH THE STANDARDS SPECIFIED IN THE LATEST EDITION OF THE ACI 318 BUILDING CODE. EACH MIX DESIGN SHALL BE REVIEWED BY AN APPROVED INDEPENDENT LABORATORY, AND SHALL BE SUBMITTED TO THE ENGINEER AT LEAST 2 WEEKS PRIOR TO THE PLACEMENT OF CONCRETE. CONTRACTOR SHALL INFORM THE ENGINEER AT LEAST 2 DAYS PRIOR TO PLACING ANY CONCRETE SO THAT THE ENGINEER MAY HAVE THE OPPORTUNITY TO REVIEW THE WORK.

CONCRETE TESTING SHALL BE PERFORMED BY AN APPROVED INDEPENDENT TESTING LABORATORY. THE TESTING AGENCY SHALL TEST (4) CYLINDERS FROM EACH CLASS OF CONCRETE USED EACH DAY. A MINIMUM OF (1) SAMPLE MUST BE TAKEN FROM EACH 50 CUBIC YARDS OF CONCRETE.

LOCATION	SPECIAL INSPECT.	SLUMP (MAX)	AGGREGATE (MAX SIZE)	COMPRESSIVE STRENGTH (PSI)
FOOTINGS	NO	5	1" DIA	3000 (2500 WAS USED IN DESIGN)
STEM WALLS	NO	5	1" DIA	3000 (2500 WAS USED IN DESIGN)
SLAB ON GRADE	NO	3-1/2"	3/4" DIA	4500 (2500 WAS USED IN DESIGN)

ANY CONCRETE THAT FAILS TO MEET SPECIFICATIONS SHALL BE REMOVED AND REPLACED AT THE EXPENSE OF THE CONTRACTOR.

THE CONTRACTOR SHALL BE RESPONSIBLE FOR THE CONSTRUCTION, DESIGN, PLACEMENT AND REMOVAL OF ALL FORMWORK. ALL SHORING DURING PLACEMENT OF CONCRETE IS THE SOLE RESPONSIBILITY OF THE CONTRACTOR.

CONCRETE SHALL BE SPECIALLY INSPECTED PER IBC 2009, TABLE 1704.4

CONCRETE REINFORCING:

ALL REINFORCING BARS SHALL CONFORM TO ASTM A-615 GRADE 60, Fy=60,000 PSI MIN., UNLESS NOTED OTHERWISE. BARS SHALL BE TIED SECURE PRIOR TO PLACEMENT OF CONCRETE TO MAINTAIN PROPER PLACEMENT AFTER CONCRETE IS IN PLACE. LAP ALL BARS 40 DIAMETERS UNLESS NOTED OTHERWISE. SPLICE BARS ONLY WHERE SHOWN ON PLANS.

MAINTAIN THE FOLLOWING CONCRETE COVERAGE FOR CONCRETE REINFORCING:

UNFORMED SURFACES IN CONTACT WITH EARTH.....3"
FORMED SURFACES IN CONTACT WITH EARTH.....2"
FORMED SURFACES EXPOSED TO OUTSIDE WEATHER.....2"
SLABS AND WALLS NOT EXPOSED TO WEATHER.....1 ½"
CLEAR DISTANCE BETWEEN BARS.....2" U.N.O.

SHOP DRAWINGS OF ALL BARS AND LOCATIONS SHALL BE SUBMITTED TO THE ENGINEER FOR REVIEW PRIOR TO FABRICATION. NORMAL WEIGHT CONCRETE SHALL HAVE A UNIT WEIGHT OF POUNDS PER CUBIC FOOT. USE OF CALCIUM CHLORIDE IS NOT PERMITTED IN ANY CONCRETE MIXES. ALL OTHER ADDITIVES AND ADMIXTURES MUST HAVE THE WRITTEN APPROVAL OF THE ENGINEER. THE ENGINEER SHALL HAVE 10 BUSINESS DAYS TO REVIEW SHOP DRAWINGS.

SHEATHING:

SHEATHING SHALL BE A.P.A. RATED, SEE PLAN FOR SPAN RATING AND THICKNESS.
SHEATHING INSTALLATION:
ROOF AND FLOOR SHEATHING SHALL BE LAID WITH THE FACE GRAIN PERPENDICULAR TO THE FRAMING MEMBERS U.N.O. AND END JOINTS SHALL BE STAGGERED. WALL SHEATHING MAY BE APPLIED HORIZONTALLY OR VERTICALLY.
ALL NAILS SHALL BE COMMON WIRE NAILS U.N.O. EQUIVALENT PNEUMATIC DRIVEN NAILS MAY BE USED IF FASTENER MANUFACTURER HAS CURRENT I.C.C. APPROVAL. FASTENERS TO BE USED SHALL BE EQUIVALENT IN LATERAL AND WITHDRAWAL STRENGTH TO THE SIZE COMMON NAIL SPECIFIED.

ROOF SHEATHING:

EDGE BLOCKING OF UNSUPPORTED EDGES OF SHEATHING AS NOTED ON PLANS. PLY CLIPS OR APPROVED EQUAL CONNECTOR SHALL BE INSTALLED AT MID SPAN BETWEEN EACH SUPPORT WHEN RAFTER SPACING EXCEEDS 16" AND EDGE BLOCKING IS NOT SPECIFIED.

TYPICAL NAILING SHALL BE 10d @ 6" O.C. AT SUPPORTED EDGES AND OVER SHEAR WALLS AND 8d AT 12" O.C. AT INTERMEDIATE SUPPORTS, U.N.O.

ROUGH CARPENTRY:

FRAMING LUMBER SHALL MEET THE FOLLOWING MINIMUM STANDARD U.N.O.

USE	SPECIES	GRADE
SILL PLATES 2 x 4	D.F.	STANDARD OR BETTER.
2 x 6, 2 x 8	D.F	NO. 2 OR BETTER.

ALL SILL PLATES IN CONTACT WITH CONCRETE OR MASONRY, SHALL BE PRESSURE TREATED OR CALIFORNIA REDWOOD.

HORIZONTAL FRAMING LUMBER: (UNO)

4x4 AND SMALLER	D.F.	NO. 2
2x ROOF JOISTS & RAFTERS	D.F.	NO. 2
2x FLOOR JOISTS	D.F.	NO. 2
3x LEDGERS	D.F.	NO. 1
4x HEADERS & BEAMS	D.F.	NO. 1
6x6 & LARGER BEAMS	D.F.	NO. 1

VERTICAL FRAMING LUMBER: (U.N.O.)

ALL STUDS	D.F.	STUD GRADE
ALL POSTS	D.F.	NO. 2
ALL OTHER LUMBER U.N.O	D.F.	STANDARD OR BETTER.

PROVIDE A MINIMUM OF (2) STUDS UNDER ALL BEAM BEARING LOCATIONS UNO. PROVIDE A MINIMUM OF (3) STUDS UNDER ALL GIRDER TRUSS BEARING LOCATIONS UNO. WHERE POSTS OR MULTIPLE STUDS UNDER BEAMS OR HEADERS ARE IDENTIFIED ON DRAWINGS, THOSE POSTS OR MULTIPLE STUDS SHALL BE CARRIED TO THE FOUNDATION. BLOCK JOISTS AT ALL SUPPORTS. DOUBLE JOISTS UNDER PARALLEL PARTITIONS. BLOCK UNDER PERPENDICULAR PARTITIONS AT 32" O.C.

JOISTS HANGERS AND OTHER METAL FRAMING ACCESSORIES ARE REFFERD TO ON PLANS BY PARTICULAR TYPE AS MANUFACTURED BY SIMPSON COMPANY, SAN LEANDRO CALIFORNIA. ACCESSORIES OF OTHER MANUFACTURER WITH EQUIVALENT LOAD CARRYING CHARACTERISTICS MAY BE USED, WHEN APPROVED BY ENGINEER.

BOLTS: HOLES IN WOOD 1/16" OVERSIZE MAX. USE WASHERS AGAINST WOOD. RETIGHTEN ALL BOLTS BEFORE CLOSING IN. PRE-DRILL HOLES FOR LAG BOLTS AND TURN BOLTS INTO HOLES, DO NOT DRIVE-IN. FIRE STOPPING, BACKING FOR INTERIOR FINISHES, NON-BEARING WALLS AND OTHER NON-STRUCTURAL FRAMING IS NOT NECESSARILY SHOWN ON THE STRUCTURAL DRAWINGS.
SEE FASTENING SCHEDULE (U.N.O.) PER IBC 2009 TABLE 2304.91.

MASONRY:

CONCRETE MASONRY UNITS: ALL CONCRETE MASONRY UNITS SHALL BE MEDIUM WEIGHT CONCRETE UNITS GRADE "N" PER ASTM C-90 AND C-331, f'm=1500 PSI. MINIMUM UNIT STRENGTH OF CONCRETE UNITS TO BE 1900 PSI. MORTAR SHALL BE TYPE "S" 1800 PSI AT 28 DAYS, GROUT SHALL BE OF FLUID CONSISTENCY WITH A SLUMP OF 8" MIN., AND SHALL DEVELOP A COMPRESSIVE STRESS AT 28 DAYS OF 2000 PSI MIN. MINIMUM WALL REINFORCING UNLESS NOTED OTHERWISE SHALL BE: #5 @ 32" O.C. VERTICAL AND #5 @ 48" O.C. HORIZONTAL. PROVIDE ONE #5 VERTICAL BAR @ CORNERS. PROVIDE (2)-#5 VERTICAL BARS @ JAMBS. LAP ALL MASONRY WALL REINFORCING 40 DIAMETERS MIN., UNLESS NOTED OTHERWISE. REINFORCING SHALL BE PLACED IN FULLY GROUTED CELLS.

MASONRY SHALL BE SPECIALLY INSPECTED PER IBC 2009, LEVEL 1 SPECIAL INSPECTION TABLE 1704.5.1

QUALITY ASSURANCE PLAN

MASONRY

QUALITY ASSURANCE:

THE QUALITY ASSURANCE TO BE PROVIDED IS TO BE LEVEL 1 PER IBC 2009 TABLE 1708.1.2 SUMMARIZED BELOW:

1. CERTIFICATES OF COMPLIANCE USED IN MASONRY CONSTRUCTION.
2. VERIFICATION OF F'M PRIOR TO CONSTRUCTION.
3. CERTIFIED MILL TEST REPORTS SHALL BE PROVIDED FOR EACH SHIPMENT OF REINFORCING STEEL USED IN MASONRY CONSTRUCTION.
4. PROVIDE A WRITTEN CONTRACTOR'S STATEMENT OF RESPONSIBILITY AS LISTED BELOW.
5. PROVIDE SPECIAL INSPECTIONS OF THE MASONRY CONSTRUCTION AS LISTED BELOW.

SPECIAL INSPECTION:

1. AN APPROVED SPECIAL INSPECTION AGENCY SHALL BE RETAINED BY THE CONTRACTOR TO PERFORM A LEVEL 1 SPECIAL INSPECTIONS PER IBC 2009 TABLE 1704 5.1.

WRITTEN CONTRACTOR'S STATEMENT OF RESPONSIBILITY:

AS PART OF THE QUALITY ASSURANCE AND SPECIAL INSPECTION PLAN, THE CONTRACTOR SHALL SUBMIT TO THE BUILDING OFFICIAL AND THE OWNER A WRITTEN CONTRACTOR'S STATEMENT OF RESPONSIBILITY CONTAINING THE FOLLOWING ITEMS:

1. ACKNOWLEDGMENT AND AWARENESS OF THE SPECIAL INSPECTION REQUIREMENTS.
2. ACKNOWLEDGMENT THAT CONTROL WILL BE EXERCISED TO OBTAIN CONFORMANCE WITH THE CONSTRUCTION DOCUMENTS APPROVED BY THE BUILDING OFFICIAL.
3. PROCEDURES FOR EXERCISING CONTROL WITHIN THE CONTRACTOR'S ORGANIZATION, THE METHOD AND FREQUENCY OF REPORTING AND THE DISTRIBUTION OF REPORTS.
4. IDENTIFICATION AND QUALLIFICATIONS OF THE PERSON(S) EXERCIZING SUCH CONTROL AND THEIR POSITION(S) IN THE ORGANIZATION.

McNEIL ENGINEERING
STRUCTURAL L.C.
6895 SOUTH 900 EAST MIDVALE, UTAH 84047
TEL: (801) 255-7700 FAX (801) 255-3071
E-MAIL: info@mcneileng.com WEB SITE AT www.mcneileng.com

STAMP / SEAL
LICENSED PROFESSIONAL ENGINEER
No. 5253654
ANTHONY B. SCHMID
STATE OF UTAH

BEAVER ANIMAL SHELTER

BEAVER, UTAH

REVISIONS

REV.	DATE	DESCRIPTION

DATE:	05-11-11
PROJECT NO:	11294
CAD DWG. FILE:	Animal Shelter.dwg
DRAWN BY:	ABS
CHECKED BY:	ABS

SHEET TITLE
GENERAL STRUCTURAL NOTES

SHEET NO.
S0.00
SHEET OF 1-5

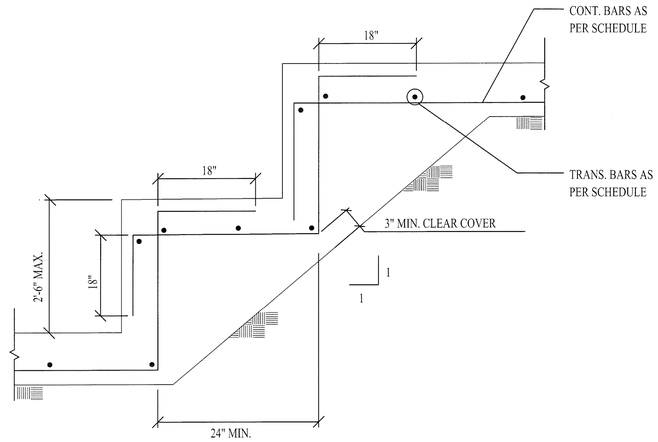

1-C S0.01 N.T.S. **STEPPED FOOTING**

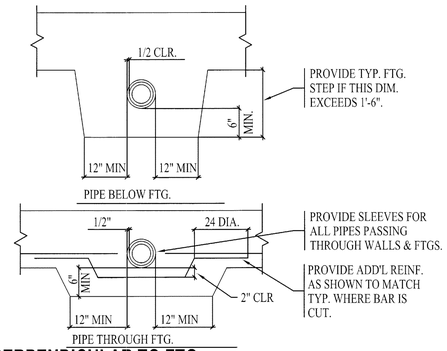

3-D S0.01 N.T.S. **PIPE PERPENDICULAR TO FTG.**

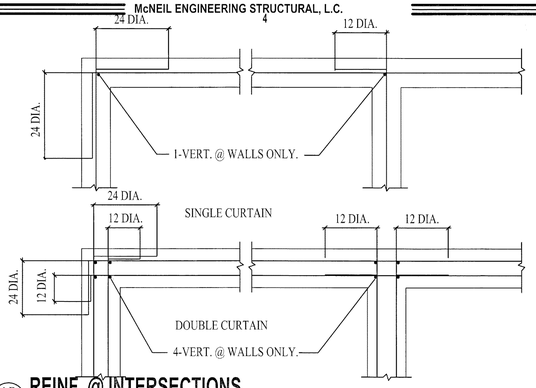

4-D S0.01 N.T.S. **REINF. @ INTERSECTIONS**

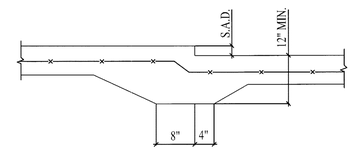

3-C S0.01 N.T.S. **DEPRESSED SLAB ON GRADE**

4-C S0.01 N.T.S. **NOT USED**

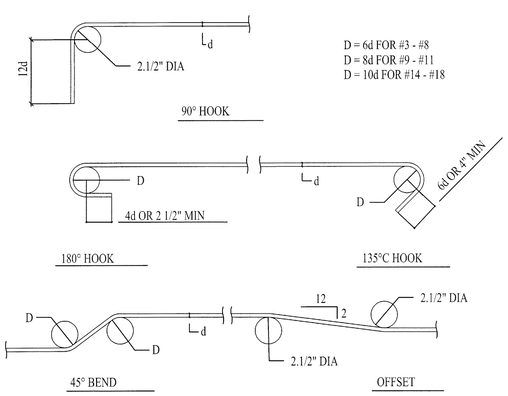

1-A S0.01 N.T.S. **REINF. BENDS, HOOKS, AND OFFSET**

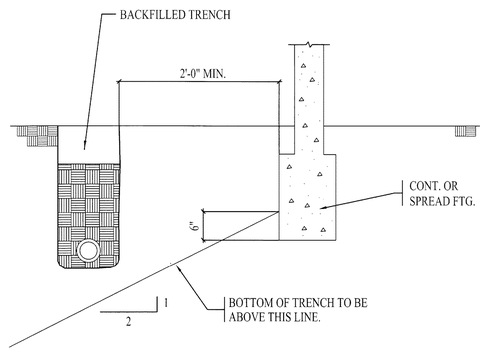

2-B S0.01 N.T.S. **PIPE PARALLEL TO FTG.**

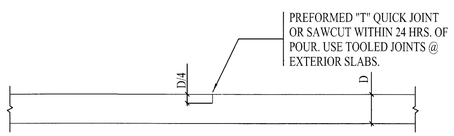

2-A S0.01 N.T.S. **SLAB ON GRADE JOINT**

SPACE CONTROL & OR CONSTRUCTION JOINTS @ 25'-0" cc MAX. EACH WAY U.N.O. ON PLANS.

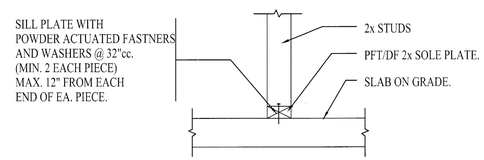

3-B S0.01 N.T.S. **SLAB ON GRADE NON-BEARING WALL**

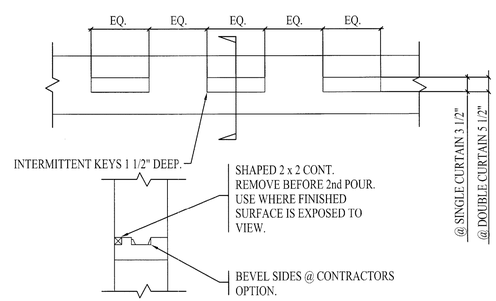

3-A S0.01 N.T.S. **CONST. JT. IN WALL OR FTG.**

APPLIES TO BOTH VERT. AND HORIZ. JOINTS.

4-B S0.01 N.T.S. **NOT USED**

4-A S0.01 N.T.S. **NOT USED**

McNEIL ENGINEERING STRUCTURAL L.C.
6895 SOUTH 900 EAST MIDVALE, UTAH 84047
TEL. (801) 255-7700 FAX (801) 255-8071
E-MAIL info@mcneileng.com WEB SITE AT www.mcneileng.com

STAMP / SEAL
LICENSED PROFESSIONAL ENGINEER
No. 5253654
ANTHONY B. SCHMID
STATE OF UTAH
05-12-11

BEAVER ANIMAL SHELTER

BEAVER, UTAH

REVISIONS

REV.	DATE	DESCRIPTION

DATE:	05-11-11
PROJECT NO:	11294
CAD DWG. FILE:	Animal Shelter.dwg
DRAWN BY:	ABS
CHECKED BY:	ABS

SHEET TITLE

TYPICAL DETAILS

SHEET NO.

S0.01

SHEET OF 2-5

FOOTING AND FOUNDATION SCHEDULE												
MARK	WIDTH	LENGTH	DEPTH	REINFORCING CROSSWISE				REINFORCING LENGTHWISE				REMARKS
				NO.	SIZE	LENGTH	SPACING	NO.	SIZE	LENGTH	SPACING	
F-1	2'-0"	CON'T.	12"	-	-	-	-	2	5	CON'T.	EQ.	STRIP FOOTING
F-2	1'-6"	CON'T.	12"	-	-	-	-	2	5	CON'T.	EQ.	THKND SLAB FTG

FOUNDATION PLAN KEY NOTES:

1. 4" SLAB ON GRADE OVER 4" COMPACTED GRAVEL ON BASE COMPACTED TO 95% OF MODIFIED PROCTOR
2. CONTROL JOINT SEE B/S0.01
3. 8" FOUNDATION WALL
4. PROVIDE DOWELS FOR 6" CMU INTERIOR WALLS PER DETAIL
5. INTERIOR TIMBER FRAMED NON BEARING WALLS.

FOUNDATION PLAN NOTES:

ARCHITECT/CONTRACTOR TO VERIFY ALL DIMENSIONS WITH ARCHITECTURAL PLANS PRIOR TO CONSTRUCTION

EXTERIOR FOOTING TO BE PLACE 30" BELOW LOWEST ADJACENT GRADE.

ALL MASONRY WALLS TO BE REINFORCED WITH #5 VERTICAL BARS AT 32" ON CENTER AND (1) #5 HORIZONTAL BARS AT 48" ON CENTER UNLESS NOTED OTHERWISE, PROVIDE (2) #5 JAMB STEEL AND (2) #5 BARS AT CORNERS SEE DETAIL 4-B/S5.00. ALL REINFORCING SHALL BE IN GROUTED CELLS AND PLACED IN CENTER OF WALL.

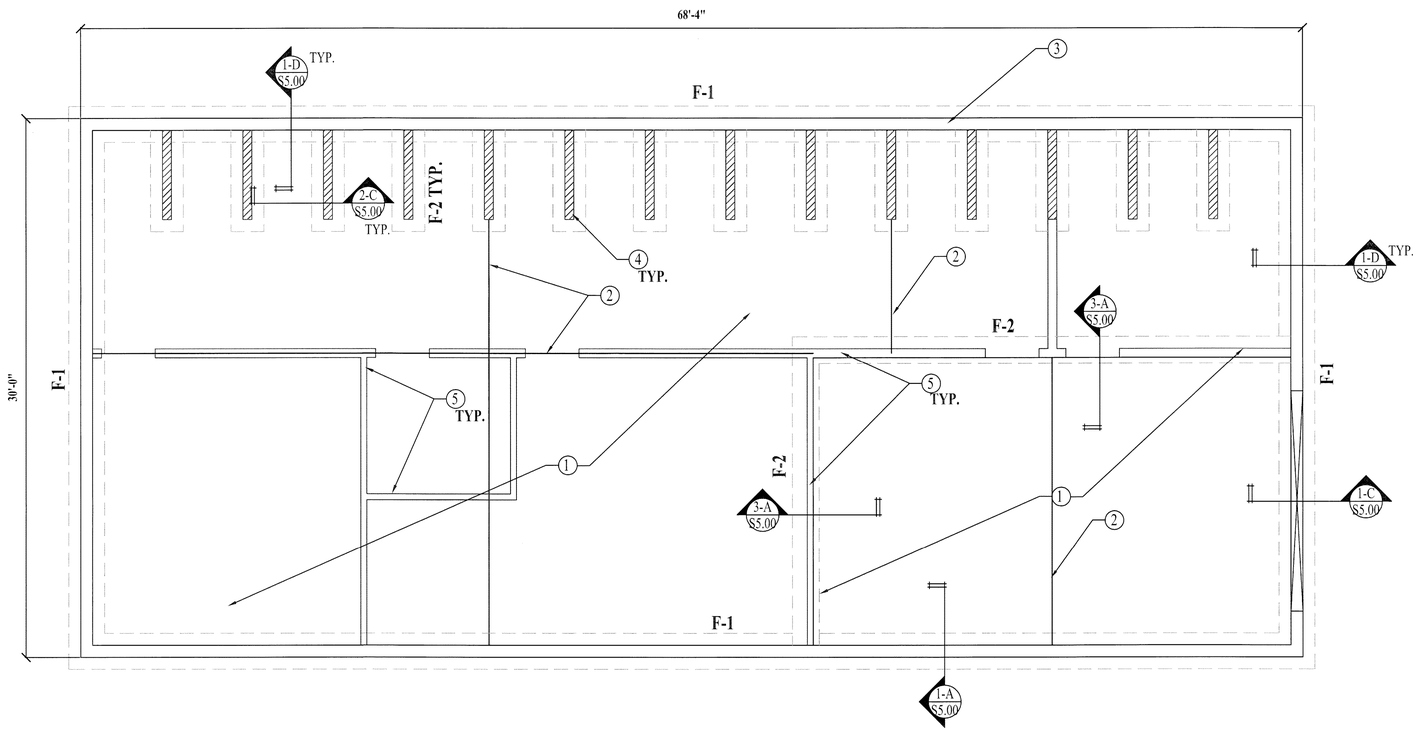

FOOTING & FOUNDATION PLAN

SCALE 1/8" = 1'-0"

McNEIL ENGINEERING STRUCTURAL L.C.
6895 SOUTH 900 EAST MIDVALE, UTAH 84047
TEL (801) 255-7700 FAX (801) 255-3071
E-MAIL info@mcneileng.com WEB SITE AT www.mcneileng.com

STAMP / SEAL
LICENSED PROFESSIONAL ENGINEER No. 5253654 ANTHONY B. SCHMID STATE OF UTAH

BEAVER ANIMAL SHELTER

BEAVER, UTAH

REVISIONS

REV.	DATE	DESCRIPTION

DATE:	05-11-11
PROJECT NO:	11294
CAD DWG. FILE:	Animal Shelter.dwg
DRAWN BY:	ABS
CHECKED BY:	ABS

SHEET TITLE

FOOTING & FOUNDATION PLAN

SHEET NO.

S1.00

SHEET OF 3- 5

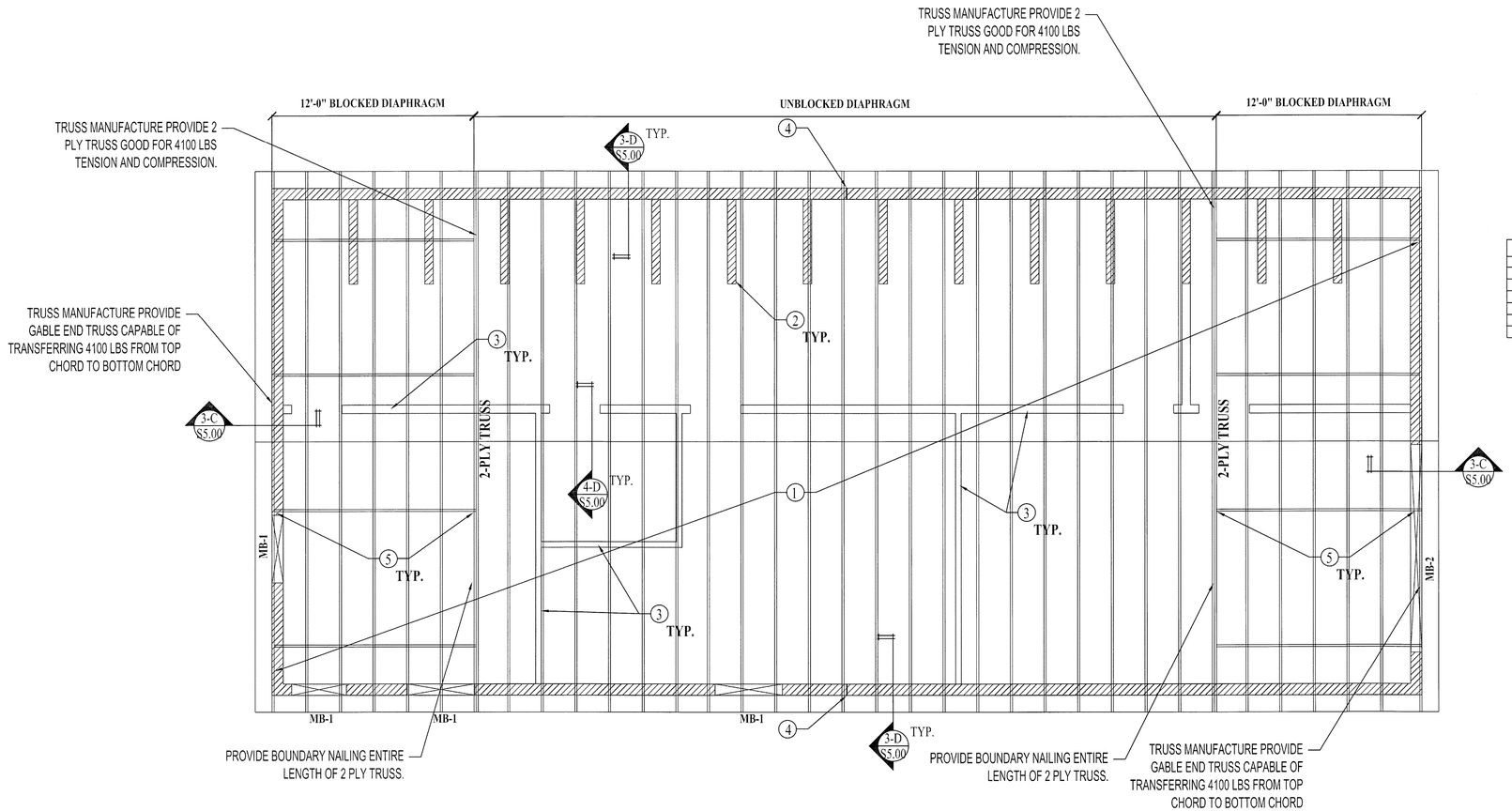

ROOF FRAMING PLAN

SCALE 1/8" = 1'-0"

ROOF FRAMING PLAN KEY NOTES:

1. PRE-FABRICATED ROOF TRUSSES AT A MAX SPACING OF 24" O.C.
2. 6" CMU WALLS 4'-0" TALL WITH #4 BARS AT 24" ON CENTER VERTICAL AND (2) #4 BARS HORIZONTAL AT TOP OF WALL
3. NON-BEARING WALLS
4. PROVIDE CONTROL JOINTS AS SHOWN
5. FULL HEIGHT TRUSS BLOCKING PER DETAIL 3-B/S5.00 AS SHOWN

ROOF FRAMING PLAN NOTES:

VERIFY DIMENSIONS WITH ARCHITECTURAL PLANS

CONTRACTOR TO VERIFY DIMENSIONS PRIOR TO START OF WORK

SEE FOUNDATION PLAN FOR MASONRY WALL REINFORCING REQUIREMENTS SHEET S1.00. ALL REINFORCING SHALL BE IN GROUTED CELLS.

MRB= LOCATION OF MASONRY BEAM SEE SCHEDULE AND DETAIL 2-D/S5.00.

ROOF SHEATHING TO BE ⅝" OSB/COX WITH A MIN SPAN RATING OF 40/20 NAILED WITH 10d NAILS AT 6" ON CENTER PERIMETER AND 12" ON CENTER FIELD.

MASONRY BEAM SCHEDULE

MARK	MIN	NOMINAL	REINFORCING		STIRRUPS
	DEPTH	WIDTH	TOP	BOTTOM	
MB-1	16"	8"	(2)#4	(2)#5	N/A
MB-2	24"	8"	(2)#4	(2)#5	N/A

1. HORIZONTAL BARS SHALL RUN 24" PAST EACH SIDE OF OPENING.
2. VERTICAL WALL REINFORCING SHALL RUN THROUGH BEAM WITH 90° HOOK @ BOTTOM.

McNEIL ENGINEERING STRUCTURAL L.C.
6995 SOUTH 900 EAST MIDVALE, UTAH 84047
TEL: (801) 255-7700 FAX (801) 255-8071
E-MAIL info@mcneileng.com WEB SITE AT www.mcneileng.com

STAMP / SEAL
LICENSED PROFESSIONAL ENGINEER No. 5253654 ANTHONY B. SCHMID STATE OF UTAH

BEAVER ANIMAL SHELTER

BEAVER, UTAH

REVISIONS

REV.	DATE	DESCRIPTION
1	11-17-10	JOIST BEARING ADDED

DATE:	05-11-11
PROJECT NO:	11294
CAD DWG. FILE:	Animal Shelter.dwg
DRAWN BY:	ABS
CHECKED BY:	ABS

SHEET TITLE

MAIN FLOOR FRAMING PLAN

SHEET NO.

S1.01

SHEET OF 4-5

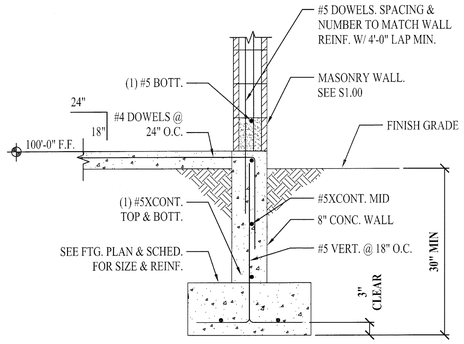

1-D $5.00 N.T.S. **FOOTING DETAIL**

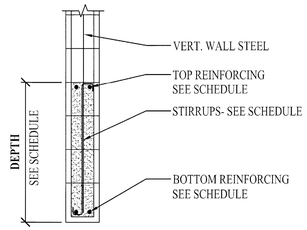

2-D $5.00 N.T.S. **MASONRY BEAM DETAIL**

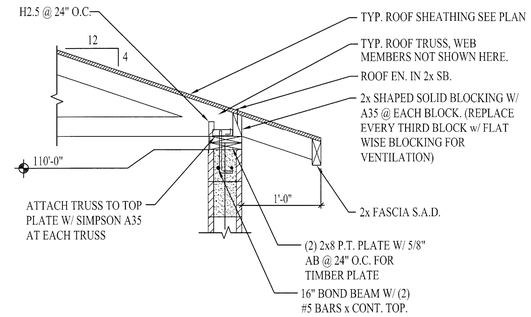

3-D $5.00 N.T.S. **ROOF / WALL CONN.**

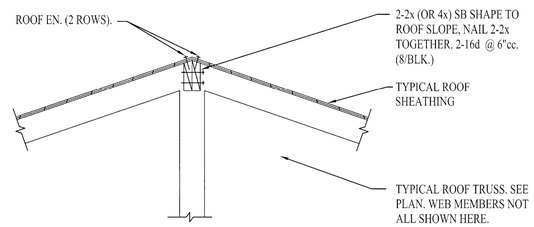

4-D $5.00 N.T.S. **RIDGE BLOCKING**

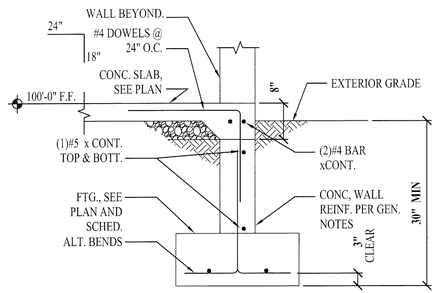

1-C $5.00 N.T.S. **EXTERIOR WALL FTG. DETAIL @ OPENING**

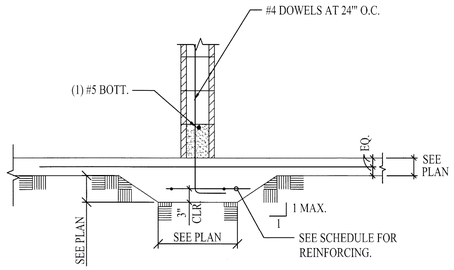

2-C $5.00 N.T.S. **INTERIOR FOOTING**

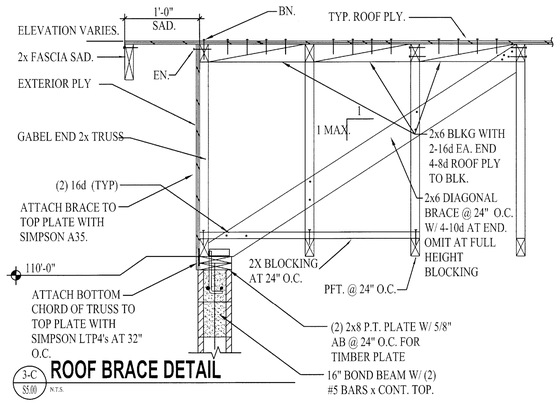

3-C $5.00 N.T.S. **ROOF BRACE DETAIL**

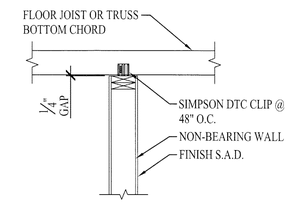

4-C $5.00 N.T.S. **NON-BEARING WALL TOP CONN.**

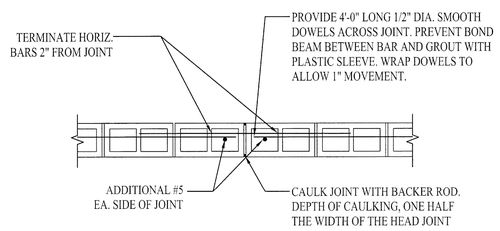

1-B $5.00 N.T.S. **CONTROL JOINT**

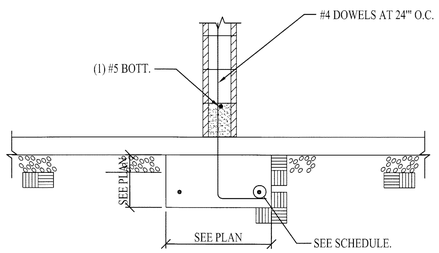

2-B $5.00 N.T.S. **INTERIOR FOOTING (OPT.)**

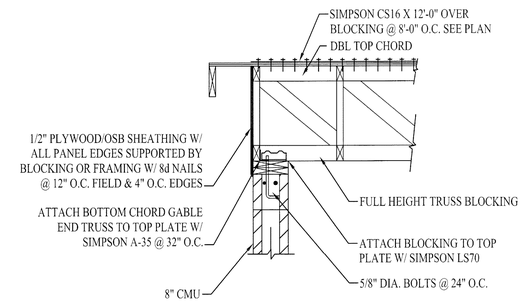

3-B $5.00 N.T.S. **FULL HEIGHT BLOCKING DETAIL**

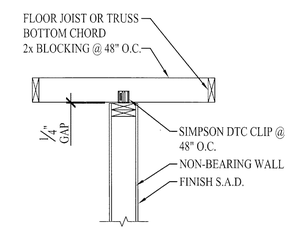

4-B $5.00 N.T.S. **NON-BEARING WALL TOP CONN.**

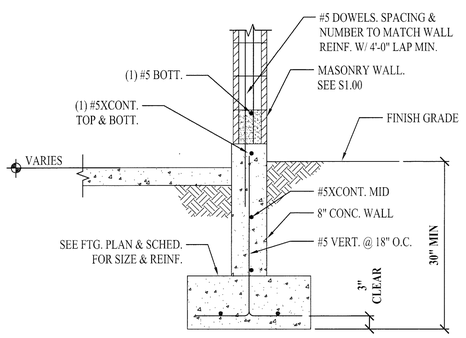

1-A $5.00 N.T.S. **FOOTING AND FOUNDATION GARAGE**

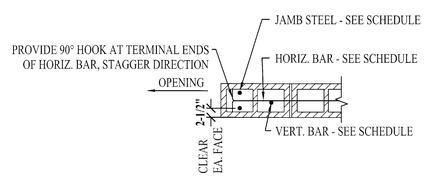

2-A $5.00 N.T.S. **TYP. MASONRY WALL**

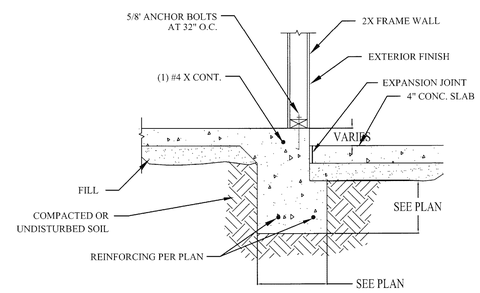

3-A $5.00 N.T.S. **STEM WALL FTG**

McNEIL ENGINEERING STRUCTURAL L.C.
6395 SOUTH 300 EAST MIDVALE, UTAH 84047
TEL: (801) 255-7700 FAX: (801) 255-3071
E-MAIL: info@mcneileng.com WEB SITE AT www.mcneileng.com

STAMP / SEAL
LICENSED PROFESSIONAL ENGINEER No. 5253654 ANTHONY B. SCHMID STATE OF UTAH

BEAVER ANIMAL SHELTER

BEAVER, UTAH

REVISIONS

REV.	DATE	DESCRIPTION

DATE:	05-11-11
PROJECT NO:	11294
CAD DWG. FILE:	Animal Shelter.dwg
DRAWN BY:	ABS
CHECKED BY:	ABS

SHEET TITLE

STRUCTURAL DETAILS

SHEET NO.

S5.00

SHEET OF 5-5

McNeil Engineering, Structural, L.C.
A Part of the McNeil Group
1664 South Dixie Drive, Suite D-104
St. George, UT 84770
Ph: 435-673-5127 fax: 435-673-6090

Structural Calculations

For:

Beaver County

Attn: Scott Albrecht

Beaver Animal Shelter

Beaver, Utah

Prepared By Anthony Beau Schmid S.E.

LICENSED PROFESSIONAL ENGINEER
No. 5253654
ANTHONY B. SCHMID
STATE OF UTAH

April 18, 2011

IMPORTANT
If the seal is not in red or green ink and the signature is not in red or blue ink, then this is an unauthorized copy and is to be rejected as unsanctioned and unusable.

McNeil Engineering assumes responsibility only for the items addressed herein and does not assume responsibility for the remainder of the structure. No site observations are scheduled to verify the understanding of the contractor or the proper installation of the items addressed.

11294
ABS

McNEIL ENGINEERING STRUCTURAL, L.C.
A PART OF THE MCNEIL GROUP
1664 SOUTH DIXIE DRIVE SUITE D-104
ST. GEORGE, UTAH 84770
(435) 673-5127 FAX: (435) 673-6090

PROJECT INFORMATION:

Project Name:	Beaver County , Beaver Animal Shelter
Project Location:	Beaver, Utah

DESIGN CRITERIA:

Governing Building Code:	IBC 2009
Type of Construction:	Specially Reinforced Masonry Shear Walls
Snow Live Load:	30 psf
Roof Dead Load:	20 psf
Wind (3 Second Gust):	90 MPH, exp C
Seismic Use Group:	I
Seismic Design Category:	D
Site Class:	D
S_{DS}:	0.61
S_{D1}:	0.31
R:	5

CONSTRUCTION MATERIALS:

Concrete 28 day Strength

Footings:	3000 psi (2500 psi used in design)
Walls:	3000 psi (2500 psi used in design)
Slab on Grade:	4000 psi (2500 psi used in design)

Reinforcing Grade:	ASTM A615 Grade 60

SOILS CRITERIA:

Bearing Pressures	1500 psf from IBC 2006 Chapter 18

11294
ABS

In accordance with IBC Section 101.3, the purpose of the structural design requirements, including earthquake requirements, contained herein is primarily to safeguard against major structural failures and loss of life, not to limit damage or maintain function.

McNEIL ENGINEERING STRUCTURAL, L.C.
A PART OF THE MCNEIL GROUP
1664 SOUTH DIXIE DRIVE SUITE D-104
ST. GEORGE, UTAH 84770
(435) 673-5127 FAX: (435) 673-6090

Index to Structural Calculations

VERTICAL LOADING 7

MASONRY LINTEL DESIGN 7
MASONRY WALL DESIGN 8
FOOTING AND FOUNDATION CALCULATIONS 10
Continuous Footings 10

LATERAL LOADING 11

SEISMIC LOADING 11
WIND LOADING 12
OUT OF PLANE, ANCHORAGE CALCULATIONS, AND DIAPHRAGM CALCULATIONS 14
MASONRY WALL DESIGN FOR IN-PLANE SHEAR 16

1 1 2 9 4
A B S

In accordance with IBC Section 101.3, the purpose of the structural design requirements, including earthquake requirements, contained herein is primarily to safeguard against major structural failures and loss of life, not to limit damage or maintain function.

McNEIL ENGINEERING STRUCTURAL, L.C.
A PART OF MCNEIL GROUP
1664 South Dixie Drive, Suit D-104 • ST. GEORGE, UTAH 84770
(435) 673-5127 • FAX (435) 673-6090

CIVIL, STRUCTURAL ENGINEERING & LAND SURVEYING
PAVEMENT & ROOF CONSULTING

PROJECT	DATE	SHEET
Beaver County	**May, 11**	**7**
Beaver Animal Shelter	DESIGNED BY **A B S**	PROJECT NO. **11294**
Beaver, Utah		

VERTICAL LOADING

Masonry Lintel Design

Masonry Lintel Design Sheet

Project: Beaver Animal Shelter

Mark:	4 FT WDW HDR	3.5 FT MAN DOOR	12.5 FT GARAGE DOOR	4 FT WDW HDR
n:	25.8	25.8	25.8	25.8
F'm (psi):	1500	1500	1500	1500
Uniform Live (psf):	30	30	30	30
Uniform Dead (psf):	15	15	15	15
Additional Dead Load (plf):	174	174	174	174
Trib. width (ft):	16	16	3	3
Point Live (lb):	0	0	0	0
Point Dead (lb):	0	0	0	0
Dist. from support < L/2 (ft):	0	0	0	0
Triangle Live W (lb):	0	0	0	0
Triangle Dead W (lb):	0	0	0	0
Span (ft):	4	3.5	12.5	4
Depth (in):	16	16	24	16
d (in):	14	14	22	14
Width (in):	7.625	7.625	7.625	7.625
Area of Steel (in^2):	0.62	0.62	0.62	0.62
Lintel Dead Load (plf):	127	127	191	127
Total Uniform Load (plf):	1021	1021	500	436
Live Uniform Load (plf):	480	480	90	90
Moment (lb.-ft):	2042	1564	9758	872
Max Shear (lb.):	2042	1787	3123	872
Rho:	0.00581	0.00581	0.00370	0.00581
k:	0.42	0.42	0.35	0.42
j:	0.86	0.86	0.88	0.86
2/jk:	5.56	5.56	6.44	5.56
fb (psi):	91.21	69.83	204.43	38.95
fs (psi):	3279.99	2511.24	9724.90	1400.82
fv (psi):	22.23	19.45	21.09	9.49
Fb (psi):	495	495	495	495
Fs (psi):	24000	24001	24002	24003
Fv (psi):	38.73	38.73	38.73	38.73
Masonry Stress :	**O.K.**	**O.K.**	**O.K.**	**O.K.**
Steel Stress :	**O.K.**	**O.K.**	**O.K.**	**O.K.**
Shear Stress :	**O.K.**	**O.K.**	**O.K.**	**O.K.**

CIVIL, STRUCTURAL ENGINEERING & LAND SURVEYING PAVEMENT & ROOF CONSULTING		**McNEIL ENGINEERING STRUCTURAL, L.C.** **A PART OF MCNEIL GROUP** 1664 South Dixie Drive, Suite D-104 • ST. GEORGE, UTAH 84770 (435) 673-5127 • FAX (435) 673-6090
SHEET **8**	DATE **May, 11**	PROJECT **Beaver County** **Beaver Animal Shelter** Beaver, Utah
PROJECT NO. **11294**	DESIGNED BY **A B S**	

Masonry Wall Design

Out of Plane Reinforcing of a Masonry Wall

Mark: TYPICAL WALL

tnom =	8	in	
grout spc.=	32	in	
# bars/cell	1		
EST =	4.9	in	pp 300 R.M.E.H.
r =	1.41	in	
d =	3.8	in	pp 173 R.M.E.H
h' =	10	ft	
f'm =	1500	psi	
Fs =	24000	psi	
n =	25.8	modular ratio	
q max =	21.5	psf	out of plane seismic/wind force
W/S	W		Wind (W) or Seismic (E)
wroofLL =	480	plf	
% seismic	0		
wroofDL =	240		super imposed dead load
wfloorLL =	0	plf	
wfloor dl =	0	plf	super imposed dead load
wdl self =	290	plf	1/2 weight of wall
e roof =	0	in	
efloor =	0	in	

	Size	Spacing				
Reinforcing	#5	32	in o.c.	rho =	0.002549	
				As =	0.11625	in^2/ft

k =	0.303		
j =	0.90		
Fa =	256.82	psi	from ACI 530-99 eq. 2-17

No seismic/wind:

M =	0	lb-ft/ft	
fa =	17.18	psi	**O.K.**
fb =	461.89	psi	Maximum bending stress allowed based on unity formula

Wind/seismic acitve

M =	269	lb-ft/ft	**<= GOVERNS**
fa =	13.10	psi	**O.K.**
fb =	633	psi	Maximum bending stress allowed based on unity formula

Mall mas =	1244.5407	lb-ft/ft
Mall steel =	1056.4389	lb-ft/ft

M gov =	1056.4389	lb-ft/ft	**O.K. >**	269	lb-ft/ft

McNEIL ENGINEERING STRUCTURAL, L.C.
A PART OF MCNEIL GROUP
1664 South Dixie Drive, Suit D-104 • ST. GEORGE, UTAH 84770
(435) 673-5127 • FAX (435) 673-6090

CIVIL, STRUCTURAL ENGINEERING & LAND SURVEYING
PAVEMENT & ROOF CONSULTING

PROJECT	DATE	SHEET
Beaver County	**May, 11**	**9**
Beaver Animal Shelter	DESIGNED BY **A B S**	PROJECT NO. **11294**
Beaver, Utah		

Out of Plane Reinforcing of a Cantilever Masonry Wall

Mark: 6" CMU WALL KENNELS

tnom =	6	in	
grout spc.=	24	in	
# bars/cell	1		
EST =	4.1	in	pp 300 R.M.E.H.
r =	1.18	in	
d =	3.8	in	pp 173 R.M.E.H
h' =	4	ft (cant.)	
f'm =	1500	psi	
Fs =	24000	psi	
n =	25.8	modular ratio	
q max =	10	psf	out of plane seismic/wind force
W/S	E		Wind (W) or Seismic (E)
wroofLL =	0	plf	
% seismic	0		
wroofDL =	0		super imposed dead load
wfloorLL =	0	plf	super imposed live load
wfloor DL =	0	plf	super imposed dead load
wdl self =	192	plf	
e roof =	0	in	
efloor =	0	in	

	Size	Spacing				
Reinforcing	#4	24	in o.c.	rho =	0.002193	
				As =	0.1	in^2/ft

k =	0.285		
j =	0.91		
Fa =	372.58	psi	from ACI 530-99 eq. 2-17

No seismic/wind:

M =	0	lb-ft/ft	
fa =	3.90	psi	**O.K.**
fb =	489.82	psi	Maximum bending stress allowed based on unity formula

Wind/seismic acitve

M =	80	lb-ft/ft	**<= GOVERNS**
fa =	3.90	psi	**O.K.**
fb =	653	psi	Maximum bending stress allowed based on unity formula

Mall mas =	1214.5619	lb-ft/ft			
Mall steel =	914.9305	lb-ft/ft			
M gov =	914.9305	lb-ft/ft	**O.K. >**	80	lb-ft/ft

Footing and Foundation Calculations

Continuous Footings

Project: Animalshelter
Location: Exterior Continous Ftg.
Footing
[2006 International Building Code(2005 NDS)]
Footing Size: 24.0 IN Wide x 12.0 IN Deep Continuous Footing With 8.0 IN Thick x 24.0 IN Tall Stemwall
LongitudinalReinforcement: (2) Continuous #5 Bars
TransverseReinforcement: #5 Bars @ 14.00 IN. O.C. (unnecessary)
Section Footing Design Adequate

Anthony
McNeil Engineering
1661 South Dixie Drive
St. George, Utah 84770

page of

StruCalc Version 8.0.100.0 5/12/2011 3:23:29 PM

FOOTING PROPERTIES

Allowable Soil Bearing Pressure:	Qs =	1500	psf
Concrete Compressive Strength:	F'c =	2500	psi
Reinforcing Steel Yield Strength:	Fy =	60000	psi
Concrete Reinforcement Cover:	c =	3	in

FOOTING SIZE

Width:	W =	24	in
Depth:	Depth =	12	in
Effective Depth to Top Layer of Steel:	d =	8.06	in

STEMWALL SIZE

Stemwall Width:	8	in
Stemwall Height:	24	in
Stemwall Weight:	150	pcf

LOADING DIAGRAM

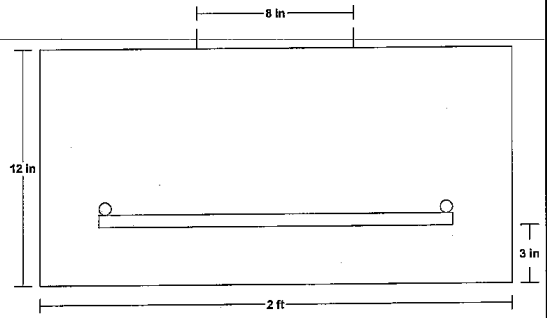

FOOTING CALCULATIONS

Bearing Calculations:

Ultimate Bearing Pressure:	Qu =	805	psf
Effective Allowable Soil Bearing Pressure:	Qe =	1350	psf
Width Required:	Wreq =	1.19	in2

Beam Shear Calculations (One Way Shear):

Beam Shear:	Vu1 =	0	lb
Allowable Beam Shear:	Vc1 =	7256	lb

Transverse Direction:

Bending Calculations:

Factored Moment:	Mu =	2848	in-lb
Nominal Moment Strength:	Mn =	0	in-lb

Reinforcement Calculations:

Concrete Compressive Block Depth:	a =	0.61	in
Steel Required Based on Moment:	As(1) =	0.01	in2
Min. Code Req'd Reinf. (Shrink./Temp. (ACI-10.5.4)	As(2) =	0.26	in2
Controlling Reinforcing Steel:	As-reqd =	0.26	in2
Selected Reinforcement:	Trans: #5's @ 14.0 in. o.c.		
Reinforcement Area Provided:	As =	0.26	in2

Development Length Calculations:

Development Length Required:	Ld =	15	in
Development Length Supplied:	Ld-sup =	5	in

Longitudinal Direction:

Reinforcement Calculations:

Min. Code Req'd Reinf. (Shrink./Temp. (ACI-10.5.4):	As(2) =	0.52	in2
Controlling Reinforcing Steel:	As-reqd =	0.52	in2
Selected Reinforcement:	Longitudinal: (2) Cont. #5 Bars		
Reinforcement Area Provided:	As =	0.61	in2

FOOTING LOADING

Live Load:	PL =	510	lb
Dead Load:	PD =	900	lb
Total Load:	PT =	1610	lb
Ultimate Factored Load:	Pu =	2136	lb

NOTES

McNEIL ENGINEERING STRUCTURAL, L.C.
A PART OF MCNEIL GROUP
1664 South Dixie Drive, Suit D-104 • ST. GEORGE, UTAH 84770
(435) 673-5127 • FAX (435) 673-6090

CIVIL, STRUCTURAL ENGINEERING & LAND SURVEYING
PAVEMENT & ROOF CONSULTING

PROJECT	DATE	SHEET
Beaver County	**May, 11**	**11**
Beaver Animal Shelter	DESIGNED BY **A B S**	PROJECT NO. **11294**
Beaver, Utah		

LATERAL LOADING

Seismic Loading

Seismic Analysis 2009 IBC/ ASCE 7-05

Zip	84713	
Occupancy	I	IBC 1604.5
I_e=	1.00	ASCE 7-05 Table 11.5-1
R=	5	Response Modification Coefficient ASCE 7-05 Table 12.2-1
Site Class:	D	IBC 1613.5.2 "D" Default Value
S_s=	0.761	
S_1=	0.236	
F_a=	1.21	IBC 1613.5.3(1)
F_v=	1.96	IBC 1613.5.3(2)
C_T=	0.02	Building period coeff per ASCE 7-05 Table 12.8-2
x=	0.75	Building period coeff per ASCE 7-05 Table 12.8-2
h_n=	10	Height of building (ft) as per ASCE 7-05 12.8.2.1

S_{MS}=	0.92	ASCE 7-05 EQ 11.4-1
S_{M1}=	0.46	ASCE 7-05 EQ 11.4-2
S_{DS}=	0.61	ASCE 7-05 EQ 11.4-3
S_{D1}=	0.31	ASCE 7-05 EQ 11.4-4
T_a=	0.11	ASCE 1-05 EQ 12.8-7

SDC= D Seismic Design Category per IBC Table 1613.5.6(1) and 1613.5.6(2)

C_S=	0.123	ASCE 7-05 EQ 12.8-2 ($Cs=S_{DS}/(R/I)$)
C_S=	0.548	ASCE 7-05 EQ 12.8-3 ($C_S=S_{D1}/T*(R/I)$)
C_S=	0.010	ASCE 7-05 EQ 12.8-5

Base Shear Coefficient

C_S=	0.123	Ultimate
C_S=	0.086	Service

CIVIL, STRUCTURAL ENGINEERING & LAND SURVEYING PAVEMENT & ROOF CONSULTING		**McNEIL ENGINEERING STRUCTURAL, L.C.** **A PART OF MCNEIL GROUP** 1664 South Dixie Drive, Suite D-104 • ST. GEORGE, UTAH 84770 (435) 673-5127 • FAX (435) 673-6090
SHEET **12**	DATE **May, 11**	PROJECT **Beaver County** **Beaver Animal Shelter** Beaver, Utah
PROJECT NO. **11294**	DESIGNED BY **A B S**	

Wind Loading

Wind Loads ASCE-7 05 Method 1

Design Criteria:

Wind Speed=	90	mph
Exposure=	C	
Adjustment Factor=	1.21	
(λ)		
Importance Factor=	1.00	
(I_w)		

Edge Zone Calculations:	**Roof**	**Floor**
Least Dimension (ft)=	30	1
Total Building Height (ft)=	15	1
Height (ft)=	10	1
Length Transverse (ft)=	30	1
Length Longitudinal (ft)=	69	1
Pitch=	4	:12

		Roof	**Floor**
10% Least dimension (ft)=		3	0.1
40% Eave Height (ft)=		4	0.1
	a=	3.00	0.10
4% Least dimension (ft)=		1.20	0.10
at least 3 ft		3.00	3.00
	a=	3.00	3.00

	Ps30 (psf)	Ps (psf)
A (Edge Zone Wall)	17.8	21.5
B (Edge Zone Roof)	0	0.0
C (Interior Zone Wall)	11.9	14.4
D (Interior Zone Roof)	0	0.0

Weighted average:

Transverse	**Roof**	**Floor**	
Ps(wall)=	15.8	57.2	psf
Ps(roof)=	0.0	0.0	psf
Longitudinal			
Ps(wall)=	15.0	57.2	psf
Ps(roof)=	0.0	0.0	psf

	Roof				**Floor**			
Wind Force	vt (lbf/ft)	vl (lbf/ft)	vtmin(lbf/ft)	vlmin(lbf/ft)	vt (lbf/ft)	vl (lbf/ft)	vtmin(lbf/ft)	vlmin(lbf/ft)
ROOF	0	0	690	300	0	0	0	0
WALL	1036	475	690	300	57	57	10	10
TOTALS	1036	475	1380	600	57	57	10	10

	Roof		**Floor**	
Governing forces	vt(lbf/ft)	vl(lbf/ft)	vt(lbf/ft)	vl(lbf/ft)
	690	300	148	130
	690	300	57	57

		Roof			**Floor**	
Diaphragm Forces	Trib. Height (ft)	Vt (lbf)	Vl (lbf)	Trib. Height (ft)	Vt (lbf)	Vl(lbf)
Roof	3	7,590	3,300	0	0	0
Wall	8			0		

McNEIL ENGINEERING STRUCTURAL, L.C.
A PART OF MCNEIL GROUP
1664 South Dixie Drive, Suit D-104 • ST. GEORGE, UTAH 84770
(435) 673-5127 • FAX (435) 673-6090

CIVIL, STRUCTURAL ENGINEERING & LAND SURVEYING
PAVEMENT & ROOF CONSULTING

PROJECT	DATE	SHEET
Beaver County	**May, 11**	**13**
Beaver Animal Shelter	DESIGNED BY	PROJECT NO.
Beaver, Utah	**A B S**	**11294**

Diaphragm Forces

Diaphragm	Area (ft^2)	Wall Area (ft^2)	Roof/Floor Dead Load (psf)	Wall Dead Load (psf)	Mech Units (lbs)	Weight (lbf)	Height (ft)
R	2251	1000	15	58	0	91765	10
2	0	0	0	0		0	0
0	0	0	0	0	0	0	0
				W=		91765	

Cs=	0.122774667	V=Cs*W=	11266	lbf
Diaphragm	hx*wx	hx*wx/SUM(wx*hx)	Fx=Cvx*V (lbf)	
R	917650	1.00	11266.42	
3	0	0.00	0.00	
2	0	0.00	0.00	
Sum=	917650	1.00	11266	

Seismic Forces are shown at service level (E*0.7)

1605.3.1

Diaphragm	(Fx/1.4)*ρ
R	10252
2	0
0	0
TOTAL	10252

$\rho =$ 1.30

Wind Forces are shown at service level (1.0*W)

1605.3.1

Transverse Direction			Longitudinal Direction		
Diaphragm	Vt (lbf)	Vt (lbf/ft)	Diaphragm	Vl (lbf)	Vl (lbf/ft)
R	7,590	110	R	3,300	110
2	0	0	2	0	0

CIVIL, STRUCTURAL ENGINEERING & LAND SURVEYING
PAVEMENT & ROOF CONSULTING

McNEIL ENGINEERING STRUCTURAL, L.C.
A PART OF MCNEIL GROUP
1664 South Dixie Drive, Suite D-104 • ST. GEORGE, UTAH 84770
(435) 673-5127 • FAX (435) 673-6090

SHEET	DATE	PROJECT
14	**May, 11**	**Beaver County**
PROJECT NO.	DESIGNED BY	**Beaver Animal Shelter**
11294	**A B S**	Beaver, Utah

Out of Plane, Anchorage Calculations, and Diaphragm Calculations

SEISMIC DESIGN

$S_{DS} = 0.61 \quad I = 1.0$

WALL OUT OF PLANE

$F_p = 0.4(0.61)(1.0)(58\ psf) = 14.2\ psf$

$0.7\ F_p = 0.7(14.2\ psf) = 9.94$

$W = 21.5\ psf > 9.94$ WIND CONTROLS

WALL ANCHORAGE

$F_p = 14.2\ (5') = 71\ plf$

$F_p = 400(0.61)(1.0) = 244\ plf$

$F_p = 280\ plf \Leftarrow$ CONTROLS

$F_p = 0.80(0.61)(1.0)(58\ psf)(5') = 142\ plf$

ANCHOR WALL EVERY 2'-0"

$0.7(280\ plf)(2'-0") = 392\ lbs$

USE SIMPSON A34 GOOD FOR 515 lbs > 392 lbs OKAY

DIAPHRAGM DESIGN

$V = 10252\ lbs$ w/ e

$W_x = \frac{10252\ lbs}{1.3(30')} = 263\ plf$

$W_y = \frac{10252\ lbs}{1.3(68')} = 116\ plf$

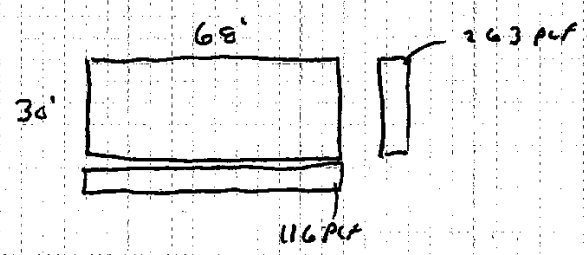

McNEIL ENGINEERING STRUCTURAL, L.C.
A PART OF MCNEIL GROUP
1664 South Dixie Drive, Suit D-104 • ST. GEORGE, UTAH 84770
(435) 673-5127 • FAX (435) 673-6090

CIVIL, STRUCTURAL ENGINEERING & LAND SURVEYING
PAVEMENT & ROOF CONSULTING

PROJECT	DATE	SHEET
Beaver County	**May, 11**	**15**
Beaver Animal Shelter	DESIGNED BY **A B S**	PROJECT NO. **11294**
Beaver, Utah		

DIAPHRAGM DESIGN (Cont)

$V = \frac{10252 \text{ lbs}}{1.3} = 7886 \text{ lbs}$

$v = \frac{\frac{7886 \text{ lbs}}{2}}{30'} = 131 \text{ plf}$

USE 5/8" SHEATHING W/ 8d NAILS AT 6" O.C. PERIMETER AND 12" O.C. FIELD. S.F. = 215 PLF OKAY

CHORD STEEL

$M = \frac{(263 \text{ plf})(30')^2}{8} = 29587.5 \text{ lbs-ft}$ $T = \frac{29587.5 \text{ lb}}{68'} = 435 \text{ lbs}$

$M = \frac{(116 \text{ plf})(68')^2}{8} = 67048 \text{ lbs-ft}$ $T = \frac{67048 \text{ lb-ft}}{30'} = 2235 \text{ lbs}$

$A_s = \frac{2235 \text{ lbs}}{24000 \text{ psi}} = 0.09 \text{ in}^2$ USE (2) #5 $A_s = 0.62$ OKAY

CIVIL, STRUCTURAL ENGINEERING & LAND SURVEYING
PAVEMENT & ROOF CONSULTING

McNEIL ENGINEERING STRUCTURAL, L.C.
A PART OF MCNEIL GROUP
1664 South Dixie Drive, Suite D-104 • ST. GEORGE, UTAH 84770
(435) 673-5127 • FAX (435) 673-6090

SHEET	DATE	PROJECT
16	**May, 11**	**Beaver County**
PROJECT NO.	DESIGNED BY	**Beaver Animal Shelter**
11294	**A B S**	Beaver, Utah

Masonry Wall Design For In-plane Shear

NOTE: WORST CASE WALL LINES WERE CHECKED AS FOLLOWS:
FRONT WALL BECAUSE IT HAS THE MOST OPENINGS
GARAGE SIDE WALL BECAUSE IT HAS THE LARGEST OPENING.

Masonry Shear Wall Design

Mark: Front Wall
f'm = 1500 psi
Fs = 24000 psi
n = 25.8 modular ratio
Inspection = 1 (1 = inspected, N =non-inspected)
V lateral = 5.2 kip total seismic/wind shear at top of wall

Reinforcement to take shear load? N

Pier	h (ft.)	b (ft.)	grout	t (in)	EST (in)	r (in)	d' (in)	hor	end cond	Vdl (dif)	rqd'dv	Vpier (kip)	1.5Vpier (kip)	Mpier (k-ft)	MVd	Fv (psi)	fv (psi)	fa (psi)	Fa (psi)	fb (psi)	fm (psi)*	kd (in)	k	C (kip)	T (kip)	fs (psi)	As req (in^2)
1	7	1.25	32	8	4.9	1.41	4	59	fix	820	0.01	0.011	0.016	0.059	3.82	35.00	0.34	13.95	367.58	642.27	856.21	0.2302	0.021	0.4	0.00	0	MIN GOV S + O.K.
2	7	3.5	32	8	4.9	1.41	4	59	fix	820	0.09	0.149	0.223	0.521	1.11	35.00	1.33	13.95	367.58	642.27	856.21	0.8592	0.024	1.5	0.00	0	MIN GOV S + O.K.
3	7	14.25	32	8	4.9	1.41	4	59	fix	820	0.79	1.310	1.964	4.563	0.25	48.39	2.67	13.95	367.58	642.27	856.21	3.7804	0.023	6.1	0.00	0	MIN GOV S + O.K.
7	7	35	32	8	4.9	1.41	4	59	fix	820	0.24	3.721	5.586	-13.358	0.09	50.44	2.81	13.95	367.58	642.27	856.21	9.8228	0.022	15.9	0.00	0	MIN GOV S + O.K.
											sum =	6.2															

Notes:
*Process is somewhat iterative. As flagged by the program reduce f'm until fs<Fs*1.333.
If fs is greater than Fs*1.333 when fm=fa, masonry will fail prior to tensioning of steel. The pier in question will not work.
DO NOT change master program. Copy spreadsheet prior to changing anything.

Masonry Shear Wall Design

Mark: Front Wall
f'm = 1500 psi
Fs = 24000 psi
n = 25.8 modular ratio
Inspection = 1 (1 = inspected, N =non-inspected)
V lateral = 5.2 kip total seismic/wind shear at top of wall

Reinforcement to take shear load? N

Pier	h (ft.)	b (ft.)	grout	t (in)	EST (in)	r (in)	d' (in)	hor	end cond	Vdl (dif)	rqd'dv	Vpier (kip)	1.5Vpier (kip)	Mpier (k-ft)	MVd	Fv (psi)	fv (psi)	fa (psi)	Fa (psi)	fb (psi)	fm (psi)*	kd (in)	k	C (kip)	T (kip)	fs (psi)	As req (in^2)
1	7	7.5	32	8	4.9	1.41	4	59	fix	600	0.004	0.241	0.361	0.843	1.62	35.00	3.15	10.20	397.58	649.35	658.55	0.6397	0.025	1.0	0.00	0	MIN GOV S + O.K.
2	7	15.25	32	8	4.9	1.41	4	59	fix	600	0.085	4.859	7.439	17.357	0.23	48.61	9.42	10.20	397.58	649.35	658.55	3.5164	0.020	5.7	0.00	0	MIN GOV S + O.K.
											sum =	5.2															

Notes:
*Process is somewhat iterative. As flagged by the program reduce f'm until fs<Fs*1.333.
If fs is greater than Fs*1.333 when fm=fa, masonry will fail prior to tensioning of steel. The pier in question will not work.
DO NOT change master program. Copy spreadsheet prior to changing anything.

	DESCRIPTION	QUANTITY
	Ceiling Mount Electrical 220 v Heater, Separate Circute each	3
	Fan Powered Heater 100 v	4
	Lights & Ballasts, Super t8's, 4 bulbs per ballast	17
	Light Switch	8
	Outlet, all outlets needed to be GFCI	12
	Motion Lights,	2
	Fuse Box	
	4" Dryer Outlet	
	Phone Jack	
	Meterbase and outside weatherhead 200 amp	1
	Wire 10/2 with ground (furnace, dryer)	
	Wire 14/2	
	Misc (wire nuts, covers etc.)	

LEGEND	
	Ceiling Mount Heater
	Fan Powered Heater
	Lights & Ballasts, Super t8's, 4 bulbs per ballast
	Light Switch
	Outlet
	Motion Lights,
	Fuse Box
	4" Dryer Outlet

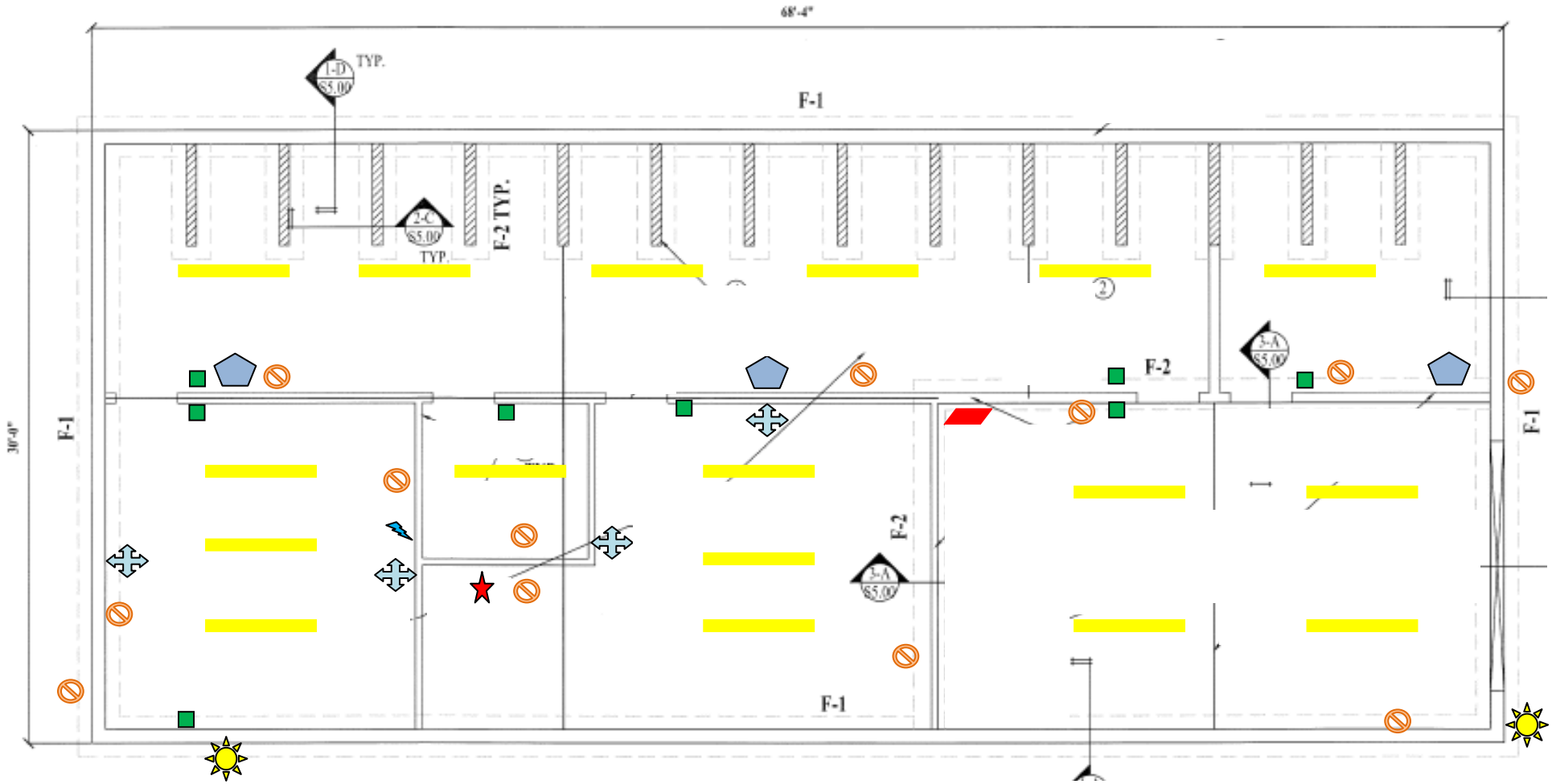

PLUMBING PLANS

REVISED 5-19-11

	DESCRIPTION	QUANTITY
	MAIN WATER LINE	
	SEWAGE LINE, 4”	
	6” width x 3” depth trough (formed when concrete is poured)	
	DRAINS, 4”	5
	HOSE BIBS	6
	FLOOR MOUNTED MOP SINK & SPIKET	1
	SINK & Manual Faucet	2
	FLOOR MOUNTED HANDICAP TOILET	1
	Solids Interceptor w/ Flush Cover, Zurn Z1183-FC or equivalent	1
	Washing Machine Drain	1
	50 gal. Water Heater	1
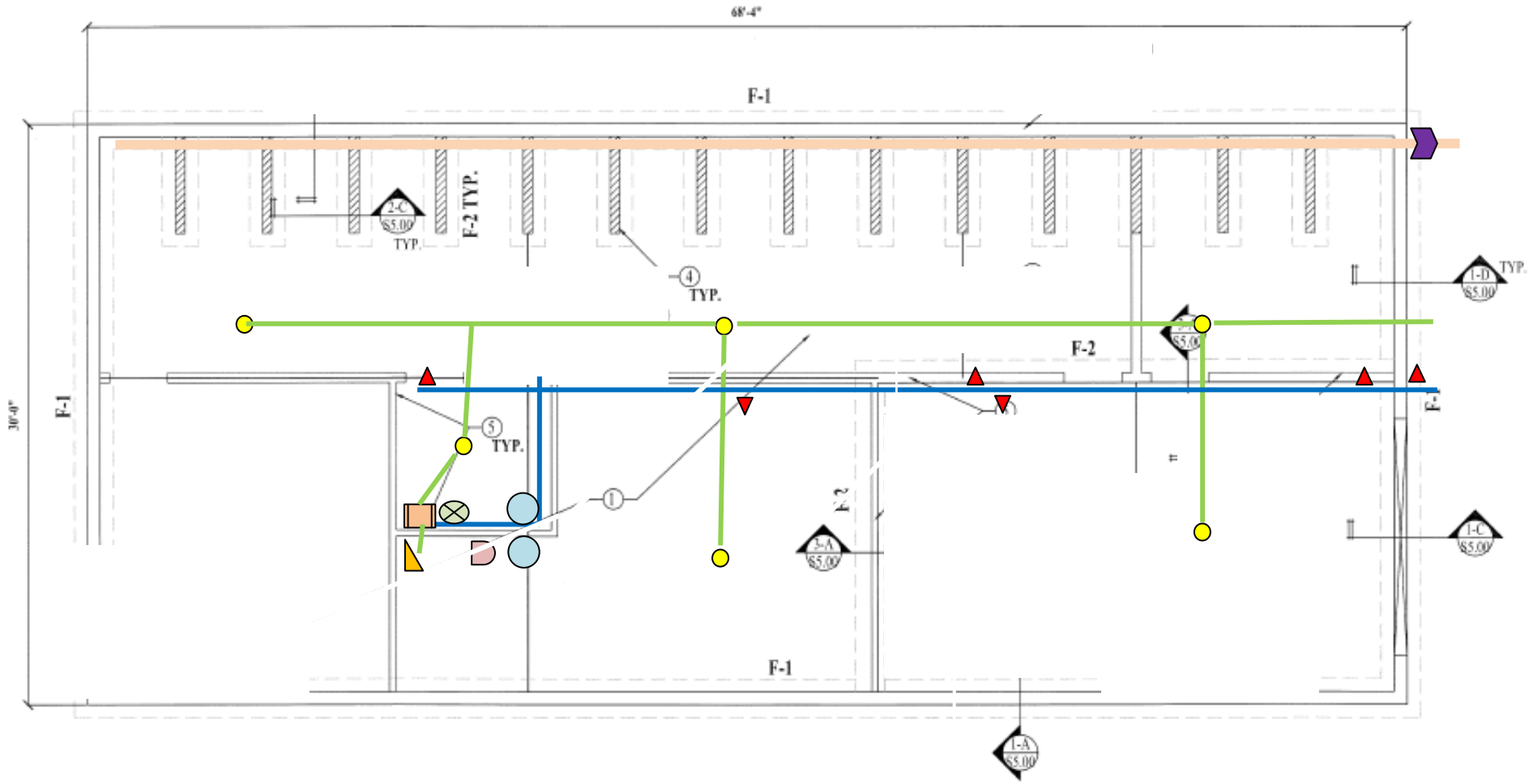
LEGEND			
	MAIN WATER LINE		Solids Interceptor
	SEWAGE LINE, 4”		Washing Machine Drain
	DRAIN TROUGH		
	DRAINS,		Water Heater
	HOSE BIBS		
	FLOOR MOUNTED MOP SINK & SPIKET		
	SINK		
	FLOOR MOUNTED TOILET